Electro *Kinetic* Technologies
Ergonomic Solutions for Transport

User-Service Manual

Pony Express 1065, -XD, -XHD and 1065-Lithium Tugger

To avoid injury, read user's manual before using.

1065 Motorized Tugger

RETAIL
ERGONOMIC SOLUTIONS

MATERIAL HANDLING
ERGONOMIC SOLUTIONS

HEALTCHARE
ERGONOMIC SOLUTIONS

Important Precautions

⚠ **Warning: Possible Injury or Death.** It is important that you read and understand this entire manual before operating or performing maintenance on your Pony Express Tugger.

⚠ **Warning: Possible Injury or Death.** This product was designed and is intended for use as a means to move material handling carts for facility worker's convenience and safety. Use of this product in a manner for which it was not designed could result in an unproven or unsafe configuration, potentially resulting in injury or death.

⚠ **Warning: Possible Injury or Death.** The Pony Express Tugger is designed to attach to various material handling, food, or hospital carts utilizing hitches provided by Electro Kinetic Technologies. Use of hitches not provided by Electro Kinetic Technologies or modifications of supplied hitches could result in an unproven or unsafe configuration, potentially resulting in injury or death.

⚠ **Warning: Possible Injury.** The Pony Express Tugger has a maximum load capacity on a level surface. Failure to use the Pony Express Tugger within its design guidelines could result in property damage or injury.

⚠ **Warning: Possible Injury.** Do not travel up or down inclines greater than 5 degrees. Do not travel sideways on inclines. Failure to do so could result in property damage or injury.

⚠ **Warning: Possible Injury.** Do not stop the Pony Express Tugger on an incline. Always park, load and unload on a flat surface.

⚠ **Warning: Possible Injury.** Do not operate Pony Express Tugger in wet environments. Do not expose the Tugger to temperatures beyond the rated specifications. Failure to do so could result in property damage, battery damage or injury.

⚠ **Caution:** Using non-approved cables and accessories may negatively affect the EMC performance.

⚠ **Caution:** Mobile RF communication equipment can affect Electrical Equipment, including the Pony Express Tugger.

⚠ **Warning: Possible Shock Hazard.** Unplug charger power cord from wall outlet before performing any maintenance, cleaning, or service to the Pony Express Tugger. Failure to do so could result in injury or death.

⚠ **Warning: Possible Injury or Death.** Disconnect batteries before performing any maintenance or service work to the unit. Failure to do so could result in injury or death.

⚠ **Warning: Possible Injury or Death.** Do not use any replacement parts not manufactured, marketed, or provided by Electro Kinetic Technologies on the Pony Express Tugger. Use of unapproved replacement parts may result in injury or death.

⚠ **Warning: Possible Shock Hazard.** The Pony Express Tugger has a NEMA 5-15 male terminal to which a 3-pronged power cord can be connected for charging the Pony Express Tugger. Grounding reliability can only be achieved when equipment is connected to an equivalent receptacle with ground. Failure to do so could result in injury.

⚠ **Warning: Explosion Hazard.** Do not use in the presence of flammable anesthetics, gas, or vapors. Use in the presence of flammable gases or vapors could result in equipment damage, injury or death.

⚠ **Warning: Possible Injury or Death.** Do not disengage the drive system on or near an inclined surface. The unit will freely move and will not stop on its own when the transaxle and braking system are disengaged. Severe injury may result if the unit is left unattended with the transaxle and braking system disengaged.

⚠ **Warning: Possible Injury or Death.** Never disengage the transaxle and electromechanical parking brake when the Pony Express Tugger is connected to a cart. Doing so could result in property damage, injury or death.

⚠ **Caution: Possible Equipment Damage or Injury to Employees.** Service and repair must only be performed by qualified, authorized Electro Kinetic Technologies Technical Support Personnel (Call 1-800-824-1068).

Save These Instructions

Thank you and congratulations for choosing the Pony Express Motorized Tugger a member of the Electro Kinetic Technologies family of quality mobility products.

Information in this manual is based upon specifications in effect at the time of the publication. Electro Kinetic Technologies reserves the right to make changes at any time without notice.

The Pony Express Tugger has been developed with advanced ergonomic design and will provide years of reliable service in your facility.

Table of Contents

Important Precautions 2
Features and Specifications 4
Basic Features 5
Operating Instructions 7
Maintenance and Servicing 8
Troubleshooting 9
Illustrated Parts List 13
Appendix 20
Warranty 21

Features and Specifications

Standard Features

- Innovative ergonomic mast and control design are adjustable to a wide range of user heights.
- Automatic sleep mode to conserve battery power when unit is not in use.
- Compact design is easily maneuvered with thumb controlled infinite variable speed forward & reverse operation.
- IP 54, NEMA 3/13 rated.
- Award winning user interface controller design.
- High capacity, deep discharge AGM or optional swappable battery pack system.
- Standard and custom hitches allow for attachment to a wide range of material handling carts.
- Maintenance free, non-marking tires.
- Dynamic braking technology ensures a controlled stop at any speed and load.
- Holding brake secures load even on inclines.
- Belly Stop on the operating control handle for safety emergency stopping.
- Battery charge level indicator prominently placed on the operating control handle.

Specifications

Enclosure Rating ..... IP54, NEMA 3/13
Width ..... 24 inches
Height (tallest) ..... 53 inches
Length (shortest) ..... 25 inches
Length (longest) ..... 42 inches
Ground Speed (SLOW) ..... 1.5 mph[1]
Ground Speed (FAST) ..... 3.0 mph[1]
Braking ..... Dynamic
Typical Range ..... 8 hours[2]

Note 1: With fully charge batteries in good condition.

Note 2: Variances in battery conditions, charge level, load, surface, caster conditions and inclines impact this time between charges.

1065
Recommended Load Weight - Casters. 5,000 pounds
Recommended Load Weight - Rails . 20,000 pounds
Maximum Peak Pull/Push Force ..... 180 pounds
Maximum Continuous Pull/Push Force ..... 90 pounds
Weight ..... 400 pounds

1065-XD
Recommended Load Weight - Casters. 6,500 pounds
Recommended Load Weight - Rails . 20,000 pounds
Maximum Peak Pull/Push Force ..... 250 pounds
Maximum Continuous Pull/Push Force .... 125 pounds
Weight ..... 750 pounds

1065-XHD
Recommended Load Weight - Casters ..... 7,500 pounds
Recommended Load Weight - Rails ..... 20,000 pounds
Maximum Peak Pull/Push Force ..... 300 pounds
Maximum Continuous Pull/Push Force ..... 150 pounds
Weight ..... 1000 pounds

1065-Lithium
Recommended Load Weight - Casters ..... 5,000 pounds
Recommended Load Weight - Rails ..... 20,000 pounds
Maximum Peak Pull/Push Force ..... 180 pounds
Maximum Continuous Pull/Push Force ..... 90 pounds
Weight ..... 400 pounds

Electrical Specifications*

Electrical Terminal ..... NEMA 5-15 male
Batteries* ..... (4) 12VDC, 35 amp-hour AGM
Battery Charger
- Input Voltage ..... factory selectable 120/230 VAC
- Input Frequency ..... 47 to 63 Hz
- Input Current ..... 5/2.5 Amp (max) @ 120/230 VAC

*See Appendix if configured as 1065-Lithium for Swappable Battery

Basic Features

When used properly, the Pony Express Tugger allows the user to safely move and maneuver material handling, food, or hospital carts utilizing hitches provided by Electro-Kinetic Technologies. Read and thoroughly understand this user manual before operating the Pony Express Tugger. If possible, have the Pony Express Tugger available as an aide when reviewing this manual.

Electro-Kinetic Technologies recommends becoming familiar with the operation of the Pony Express Tugger first by itself and then when hitched to an empty cart. Use a large open area on a flat surface that is free of obstacles for training and practicing.

When using the Pony Express Tugger always be aware of your surroundings, operate the unit slowly and cautiously. Avoid collisions which may injure the user, nearby people, cause damage to the facility, or cause damage to the cart or Pony Express Tugger. Be courteous of others and use the tugger's horn to let your presence be known.

Anticipate and avoid unsafe situations. Be especially cautious when using the Pony Express Tugger on sloped surface. The Pony Express Tugger is designed for navigating ADA approved sloped surfaces at derated payload capacity. Contact and consult Electro-Kinetic Technologies for de-rating on inclines.

Tugger Control Handle (Figure 1)

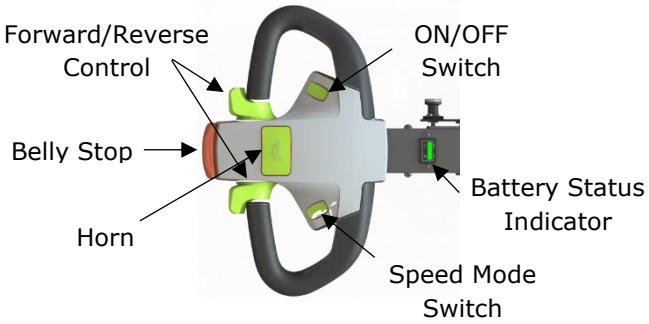

ON/OFF Power Switch
The ON/OFF power rocker switch is located on the left side of the Pony Express Tugger control handle. To turn the power on, fully depress the switch to the ON position. The Battery Status Indicator will illuminate and indicate the tugger is powered ON.

Speed Modes
The Pony Express Tugger control handle provides two speed modes, FAST ("rabbit") or SLOW ("turtle"). The FAST/SLOW rocker switch located on the right side of the Tugger control handle allows selection of the desired speed mode. Depressing SLOW enables the low-speed mode, whereas FAST enables the high-speed mode. The speed mode applies to both forward and reverse directions.

Forward/Reverse Control
The Forward/Reverse direction of the tugger is controlled by the thumb levers located on either side of the Pony Express Tugger control handle. Pushing either of the thumb levers forward (up) will cause the Pony Express Tugger to move forward. Pushing either thumb lever backward (down) will cause the Pony Express Tugger to move in reverse. The further you push the thumb levers (in either direction) the faster the Pony Express Tugger will move, within the limits of the chosen speed mode.

Horn
The Pony Express Tugger control handle has a horn button located on the top of the control handle. Press the button to sound the horn. Release the button for the horn to turn off.

Belly Stop / Emergency Stop
To stop the Pony Express Tugger in an emergency, press in on the Belly Stop button. The Belly Stop button is the large red button covering most of the Pony Express Tugger control handle's front portion nearest the operator. The Belly Stop will lockout the forward/reverse control and apply the parking brake to bring the tugger to a stop. The Battery Status Indicator will flash continuously if the Belly Stop has been pressed. To reset the Pony Express Tugger function after the Belly Stop has been pressed, cycle the tugger power OFF and then ON.

Battery Status Indicator
The Battery Status Indicator located on top of the Pony Express Tugger control mast indicates the charge state of the on-board batteries. The indicator will illuminate when the power switch is ON and is most accurate after being powered on longer than one minute. If the battery Status Indicator shows red, yellow and green, the batteries are charged. If the indicator shows yellow and red, then the batteries should be recharged. If the indicator shows just red or flashing red, the batteries need to be charged immediately.

Optional Keyswitch (Figure 2)

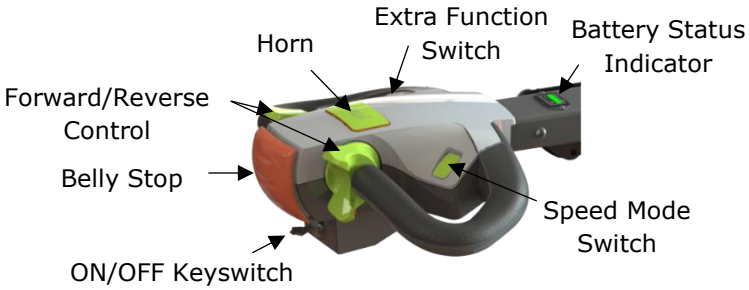

ON/OFF Keyswitch
Your Pony Express Tugger may include an optional ON/OFF Power Keyswitch in place of the standard rocker switch. The ON/OFF Power Keyswitch is located on the bottom face of the Pony Express Tugger control handle. Power ON the Pony Express Tugger by inserting the key and rotate a quarter turn. The key will lock into the keyswitch when in the ON position. Turn OFF power by rotating the key by a quarter turn.

Extra Function Switch
The Pony Express Tugger may include a rocker switch that controls an additional function for the tugger or a specialty hitch. Review the respective manual for operation and control using the Extra Function Switch. Contact Electro-Kinetic Technologies for non-standard attachments.

Adjusting the Handle

The Pony Express Tugger has a three-position adjustable handle. To change the position of the handle, pull the lock-pin location on the left side of the mast, rotate the handle to the desired position and release the lock-pin.

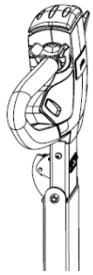

Vertical – Locks the handle to be in-line with the mast. This position is recommended while the tugger is not in use or for a confined location, such as an elevator. The vertical handle position minimizes the storage footprint when the mast is also in a vertical position.

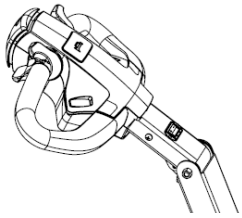

Middle – Positions the handle at approximately 45deg angle to the mast and is an in-between position for users who are taller.

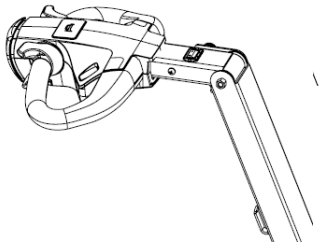

Horizontal – Locks the handle in a horizontal when the mast pulled back completely to the hardstop. This is the most commonly used handle position for the majority of operators.

Braking and Manual Override

The Pony Express Tugger uses an electrically deactivated mechanical brake and the electric motor to slow and stop itself. EKT recommends using the SLOW "turtle" speed mode when moving payloads of any size. **Note**: Braking and stopping is only effective when the drive wheels have traction. Do not drive or exceed unsafe speeds on surfaces with a potential for lost traction when stopping; such as slick or dusty or wet floors, or inclines / ramps that exceed ADA requirements.

Electromechanical Brake – The mechanical brake is deactivated when the operator commands forward or reverse. The mechanical brake is engaged at all other times and acts as a parking brake, which keeps the tugger from moving when not being used. The electromechanical brake is applied immediately when the Belly Stop button is pushed.

Override to manually push the tugger
The parking brake function on the Pony Express Tugger can be temporarily disabled to allow the unit to be pushed manually. The Battery Status Indicator will flash when the electromechanical brake is disabled. To disable the mechanical brake:

1. Move the Pony Express Tugger to a level surface, disengage the tugger from any payloads, and place the power switch in the OFF position.

2. Locate the brake handle underneath the chassis of the tugger, in between the two drive wheels (Figure XX). Pull the release handle toward the read of the tugger (mast) to disengage the parking brake.

3. Return the brake handle to the original forward position when leaving the tugger unattended or to return to service. **Note**: Leaving the parking brake disengaged can allow for unanticipated movement or rolling.

⚠**Warning: Possible Injury or Death.** Do not disable the drive system on or near an inclined surface. The unit will freely move and will not stop on its own when the transaxle and braking system is disabled. Severe injury may result if the unit is left unattended with the transaxle and braking system disabled.

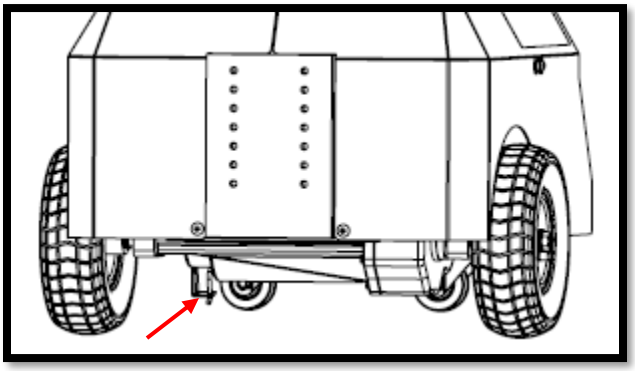

Figure 3. Handle to disengage mechanical brake.

Operating Instructions

⚠**Warning: Possible Injury or Death.** Whenever moving carts with the Pony Express Tugger, be extremely cautious and deliberate with your movements using an appropriate speed for the environment. Failure to do so could result in property damage, injury or death.

⚠**Warning: Possible Injury or Death.** The Pony Express Tugger is designed to move carts on flat or ADA approved sloped surfaces. Using the Pony Express Tugger on a sloped surface steeper than the ADA requirements may result in loss of control or disconnection of the Pony Express Tugger and the cart.

To operate the Pony Express Tugger:

1. Disconnect and properly stow the charger cord. The tugger will not drive when it is charging.

2. Set the power switch to the "ON" position on the control handle.

3. Observe the Battery Status Indicator and ensure it is displaying sufficient power for tugger operation. Reference the section for Battery Status Indicator for additional description.

4. Select the desired speed (FAST/SLOW) using the Speed Mode switch.

5. Slowly push either of the thumb levers on the control handle forward (up). The Pony Express Tugger will start to move and accelerate forward, away from you.

6. To stop, release the thumb levers allowing them to return to their neutral position. The Pony Express Tugger will coast to a stop. Once stopped, the Pony Express Tugger automatically sets the parking brake to keep the unit from unintended movement.

7. To drive in reverse, gently push either of the thumb levers on the control handle backward (down). The Pony Express Tugger will start to move and accelerate backwards, toward you. Always adjust the speed appropriately for safe operation. The tugger can drive forward and reverse at equal speeds.

For the first practice drive, the following is recommended:

1. Make sure the practice space is flat, smooth surface in an open area that is free of obstacles.

2. Make sure the cart or carts are securely hitched to the Pony Express Tugger. A cart that breaks loose or becomes unhitched from the tugger while moving is a danger.

3. All casters on the payload or cart must be unlocked for the Pony Express Tugger to function properly. The drive wheels of the Pony Express Tugger will perform the steering and braking functions.

⚠**Warning: Possible Equipment Damage or Injury to Employees.** The Pony Express Tugger is designed for use on rolling carts with at least one set of fixed casters. Use on carts without one set of fixed casters is unsafe and could cause personal injury or damage to property.

4. Ensure the brake lever on the Pony Express Tugger is in the original, engaged position. **Note**: The lever is in the wrong position if the tugger can be manually pushed or if the Battery Status Indicator is flashing when powered ON.

5. Adjust the control handle to one of three desired positions. Fully extend the mast by pulling it away from the Pony Express Tugger. Secure all power cords as necessary.

6. Depress the power switch to the ON position. Depress the speed switch to select the SLOW speed setting.

7. Begin driving the Pony Express Tugger by slowly pushing the speed control thumb levers to move forward. Steer the tugger and cart(s) in different directions to practice and learn the feel of how the cart and tugger maneuver.

8. Release the thumb lever to stop the tugger. Practice stopping, accelerating, and decelerating the cart while moving forward.

9. Practice driving and maneuvering in reverse. Always make sure the area behind you is clear when driving in reverse. The Pony Express Tugger will have the same speed and similar stopping distance when driving in reverse.

10. Depress the speed switch to select the FAST speed mode. The thumb lever controls are more reactive, but the tugger will provide the same amount of power to move the attached cart.

11. Remember to turn the power switch to the OFF position when not driving (no visible lights on the Battery Status Indicator).

⚠**Warning:** The Pony Express Tugger transport is designed for high maneuverability, but use caution when encountering obstacles. Failure to drive cautiously can result in collisions which may cause physical harm. When approaching an obstacle, keep your speed at a minimum and maintain a safe distance from that object. Avoid all small objects on the ground. The Pony Express Tugger's ground clearance may be less than the size of the object.

Maintenance and Servicing

Charging

The Pony Express Tugger is equipped with sealed, deep cycle batteries which require charging on a regular basis. An on-board system is integrated into the electronics of the tugger for easy and convenient charging. (See insert to this Manual if your tugger is configured to use a Swappable Battery Pack) The Pony Express Tugger is equipped with NEMA 5-15 male terminal for charging. **Note:** Always use a grounded supply outlet and power cord with grounding pin.

1. Position the Pony Express Tugger close to a 120 VAC power outlet. (If unit has been factory-set for 230 VAC use, then use the appropriate outlet).

2. Turn the power switch to OFF on the tugger.

3. Insert the charging cord into the 3-prong receptacle on the rear of the Pony Express Tugger, near the base of the mast.

4. Connect the charging cord into the AC power outlet ensuring that the plug is fully engaged into the supply outlet.

5. Allow the unit to charge overnight – six to eight hours for a full charge. For optimum battery life, charge the Pony Express Tugger whenever it is not in use – it cannot be over-charged.

6. With the power switch ON, the Battery Status Indicator will flash with ascending colors when actively charging.

7. Unplug the cord from the AC power outlet and from the Pony Express Tugger. Stow and secure the charging cord. The Pony Express Tugger will not operate if it is plugged into a function AC outlet.

8. With the power switch ON, the Battery Status Indicator will show red, yellow, and green if fully charged. Otherwise continue charging the Pony Express Tugger.

Replacing the Batteries

If the Pony Express Tugger begins to lose range or to struggle at ascending ramps or moving carts, it may be a sign that the batteries need replacing. Other signs indicating the need to replace batteries include heating or swelling of the batteries which may be accompanied by an acrid odor. If any of these conditions are present, have the batteries tested. Be sure to document or photograph the wiring of the battery bank and recreate it if batteries are being removed or replaced.

The standard batteries for the Pony Express Tugger is an absorbed glass matt (AGM) battery that can be load tested. The individual batteries must be fully charged and have an open-circuit voltage of 12.6V or greater for an accurate test. The load test equipment is set to 100amps and duration of 10 seconds. If the voltage reading is below 10V at the end of the test, then the batteries should be replaced. (Does not apply to the Swappable Battery Pack. Review the insert to this Manual. Contact Electro-Kinetic Technologies to request additional guidance.)

Regular Maintenance Schedule

Your Pony Express Tugger will give you years of safe and dependable service for regular maintenance and early attention to any developing problems. EKT recommends the following maintenance program. Frequent or continuous use of the Pony Express Tugger will benefit from more frequent maintenance.

⚠ **Caution:** Disconnect the batteries and wall outlet or power sources before performing any maintenance.

Every Day or as Needed:

1. Maintain the charge on the batteries.

2. Clean debris from the wheels and drive unit assembly.

3. Clean the Tugger with a damp sponge.

Once each Month:

1. Check for loose connectors and any signs of unusual wear. Replace worn components.

Once every Three Months:

1. Remove the metal cover and check the wires for wear, fraying or cracking.

2. Check the connectors for wear or cracking.

3. Examine the tires and wheel assemblies for wear or damage.

Cleaning

Use warm soapy water and a damp sponge to clean your Pony Express Tugger. Do not pressure wash or hose off your tugger unless specifically rated for washdown. The water may damage electronic components. Do not use harsh or abrasive cleaners on the Pony Express Tugger or its tires. These types of cleaners will damage the finish of your Pony Express Tugger and may cause premature tire wear. Clean the tires with a bristle brush dipped in warm water.

Removing the Cover

Accessing the batteries and electronics of the Pony Express tugger requires removing the cover of the unit.

Note: The 1065-XD and 1065-XHD have additional ballast weight stacks that should be removed for safety prior to removing the cover and servicing.

1. To access the battery section, remove the screws as shown in Figure 5 and removed the plate taking precautions not to let the plate coming in contact with the battery terminals.

2. The electrical system on your Pony Express Tugger operates on a 24 volt system, requiring the 12 volt batteries to be connected in a specific way. If the batteries are not connected correctly, damage to the electrical control unit of the Pony Express Tugger will occur and the unit will be inoperable. Please refer to Figure 6 for more information.

3. The batteries supplied with the Pony Express Tugger are maintenance free sealed AGM batteries. Do not remove the battery caps. Do not attempt to add water. This will ruin your batteries and void your warranty.

4. If a powdery white substance appears on or around the battery terminals, clean them: use a solution of baking soda and water with a toothbrush.

5. When replacing the batteries, all four batteries must be replaced at the same time. Clean the terminals and battery posts with a wire brush. When reattaching the terminals, be sure all connections are tight. The black wire must be attached to the negative (-) terminal. Failure to connect with the proper polarity will damage the control module.

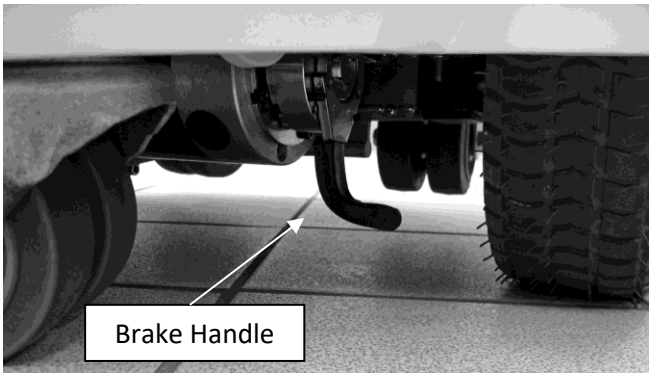

Figure 4

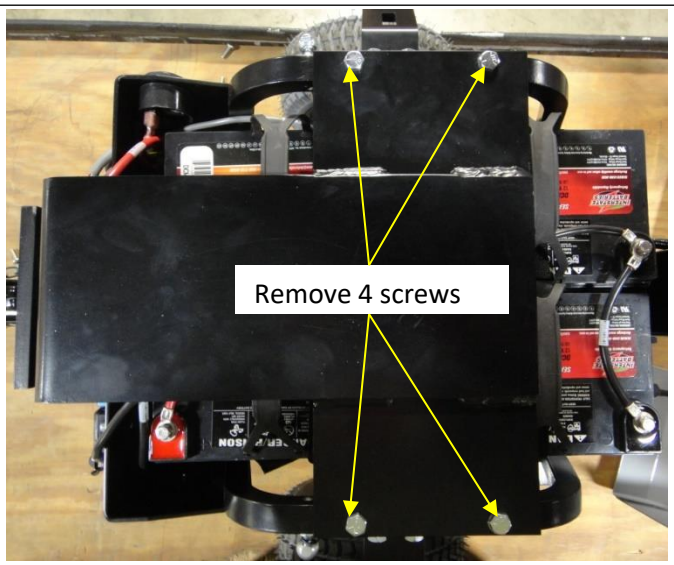

Figure 5

Figure 6

Troubleshooting

Battery Charge Levels

The Pony Express Tugger uses software to estimate remaining battery power by measuring current and voltages of the batteries and electric motor. The remaining power is most accurately displayed on the Battery Status Indicator after the Pony Express Tugger has been operated for one minute. As power is drawn from the battery pack, successive LEDs will go dark on the indicator starting with Green, then yellow and finally red.

Additionally, the lights on the Battery Charge Indicator will flash if the software detects a fault.

Normal Operation

LEDS	Description
10 Bars R Y G	The Pony Express Tugger is fully charged and ready for operation.
7 Bars R Y G	The display is showing only red and yellow. Connect the Pony Express Tugger to an AC outlet to recharge the batteries as soon as possible.
3 Bars R Y G	The display is only showing red. Connect the TUGGER to an AC outlet to recharge the batteries immediately to prevent damage to the batteries. **Note:** Continuous discharging of batteries to this level, limits the life of the batteries.
1 Bar R Y G	ONE (1) RED LED Flashing. The battery is almost completely discharged. Charge immediately.
0 Bars R Y G	Display is dark. • Check to be sure ON/OFF switch is ON. Check circuit breaker to see if tripped. Reset once. If it continues to trip call for service. Batteries are dead. Charge batteries, then load test. Replace if required.

Level 1 Display Faults
Below are the most common display faults.

LEDs	Description
6 Bars R Y G	If all bars are flashing rapidly the emergency stop on the control has been engaged. Cycle ON/OFF switch to reset this fault.
1-10 Bars R Y G	If the display is cycling from 1 to 10 bars (red, yellow then green), the Tugger batteries are being charged. To engage unit, remove power cord from the outlet and cycle the ON/OFF switch.

Level 2 Display Faults
Below are some fault codes that can be used by qualified trained technician or maintenance personnel to troubleshoot and repair the Pony Express Tugger. **Note:** Display will flash.

LEDs	Description
Flashing 2 Bars R Y G	One or both of the power wires between the motor and control has opened. Check this wiring
Flashing 3 Bars R Y G	The motor has a short circuit to the battery connection. Contact your service provider to replace
Flashing 8 Bars R Y G	Controller fault. Make sure all connections are secure.
Flashing 9 Bars R Y G	One or both of the control wires between the motor brake and control has opened. Check this

System and Mechanical Faults

Accessing the electrical and mechanical components of the Pony Express Tugger carries risk, especially fire hazard and electrical shock. Use caution and the following procedures to reduce the risk.

1. Disconnect the power charging port from any wall outlet or power sources.

2. Physically restrain the tugger with blocks, chocks, or other means to prevent inadvertent movement and provide stability when servicing the Pony Express Tugger.

⚠ **Warning: Possible Shock Hazard.** The Pony Express Tugger has a NEMA 5-15 male terminal to which a 3-pronged power cord can be connected for charging the Pony Express Tugger. Grounding reliability can only be achieved when equipment is connected to an equivalent receptacle with ground. Failure to do so could result in injury.

Resetting the Circuit Breaker
The Pony Express Tugger has a circuit breaker as a safety measure. The circuit breaker may trip, cut power to the tugger, and need to be reset. The following procedure explains how to check and reset the breaker. **Note:** If the circuit breaker trips again and a short time after being reset, discontinue use of the tugger as there may be an electrical failure that requires servicing.

1. Remove the cover per previous section to access the electrical panel.

2. Locate the circuit breaker between the battery charger and drive control unit (Figure 7). It is attached to the positive (+) terminal of the battery bank.

3. Locate the reset button under the front of the circuit breaker. Push the button and it will audibly click if the circuit breaker had tripped (Figure 8).

4. Re-install the cover and tighten all bolts.

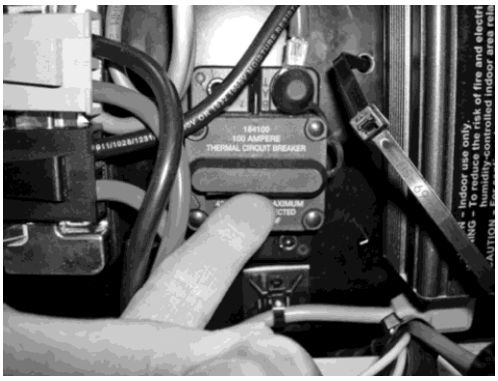

Figure 7. Location of the Circuit Breaker

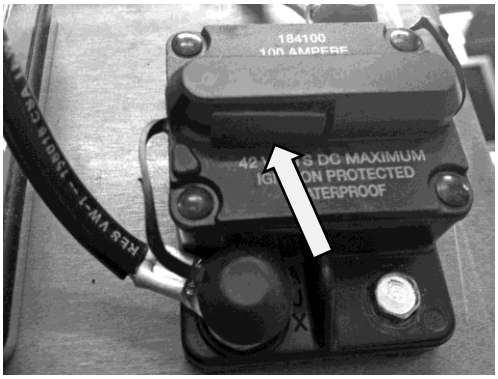

Figure 8. Circuit Breaker reset button.

Replacing the Charger Fuse
(Does not apply for tuggers configured for Swappable Battery pack)
The internal battery charger may include a replaceable fuse. If the Pony Express Tugger will not charge, then the fuse may need to be replaced. (See section on Battery Status Indicator level 1 display faults) **Note:** If the fuse blows again a short time after being replaced, discontinue use of the tugger as there may be an electrical failure that requires servicing.

1. Remove the cover of the Pony Express Tugger per Maintenance and Servicing section.

2. Locate the fuse on the side of the charger (Figure 9).

3. Replace with a 20amp, 250VAC, fast acting 5mm x 20mm inline fuse.

4. Re-install the cover and tighten all bolts.

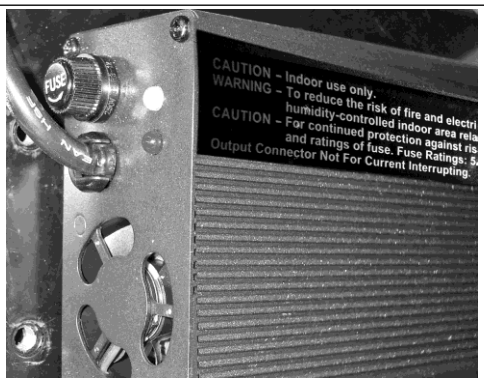

Figure 9. Fuse location on the battery charger.

Common Troubleshooting
The following is a list of other items to check before calling for service.

Symptom	Possible Cause	Solution
Display is illuminated but unit will not operate.	• Holding brake not engaged. • Transaxle worn out.	• Engage holding brake by moving brake handle • Call service provider to replace
Unit runs slow	• Speed mode is set to SLOW speed • Battery charge low	• Check speed mode and change to FAST. • Check display on control. Recharge unit if reading low.
Display shows full charge but drops shortly after powering unit.	• Batteries are weak	• Remove batteries and charge. Load test all batteries and replace if they fail.
Display shows low charge after charging for eight hours.	• Check to make sure display shows unit charging (see above).	• Check outlet to make sure outlet has power. • Call service provider to replace.
Intermittent Running	• Loose connections in power and/or control wiring. • Motor needs to be replaced.	• Check wiring or call your service provider. • Call service provider to replace.

Illustrated Parts List

Item No.	Part No.	Quantity
20	1065-4277	1
21	0710-61	2
23	1065-1014	1
25	0777-074	2
48	1065-013	1
49	1065-1009	1
68	0150-17	10
69	0001-20	3
72	0006-38	4
73	0003-50	6
74	0002-57	2

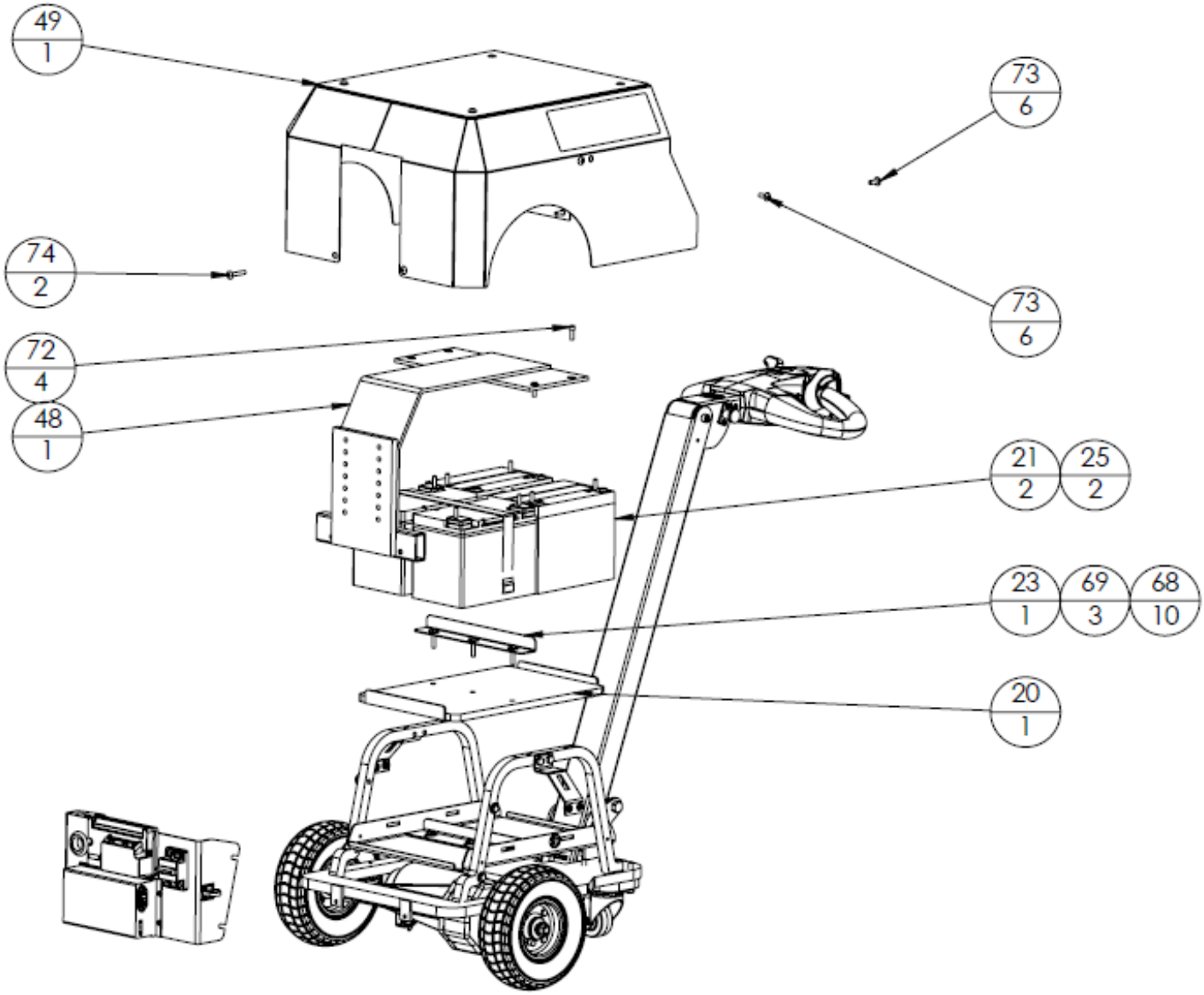

Item No.	Part No.	Quantity
3	1065-1001	2
4	8000-565	2
5	0006-40	8
6	0777-087	2
7	0001-43	4
8	0497-141	2
9	0483-191	2
10	0001-27	4
46	0500-45	1
53	1065-1004-99	2
62	0006-08	1
63	0006-28	2
64	0006-27	2
70	0001-43	4
84	1065-1000	1

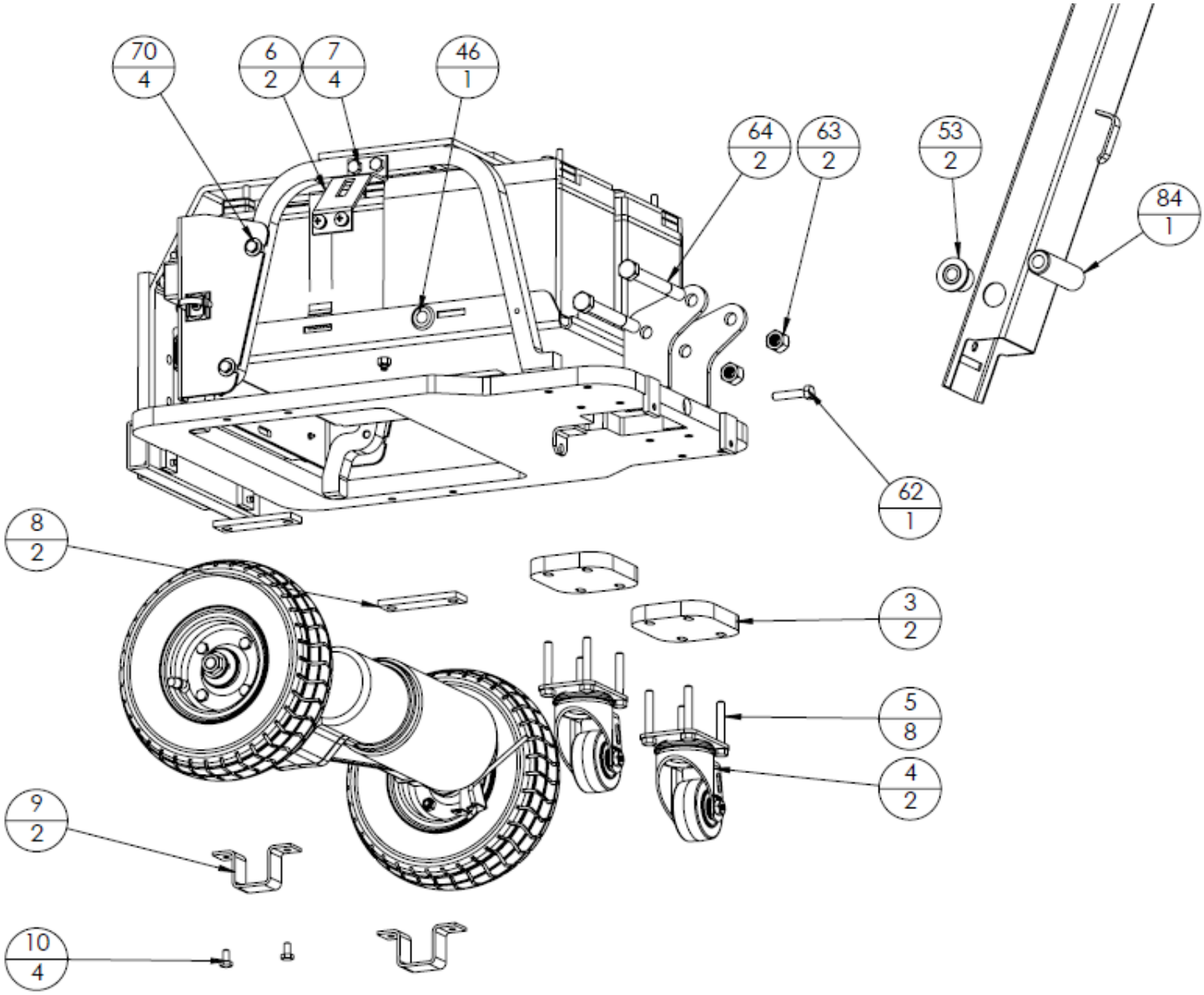

Item No.	Part No.	Quantity
26	0812-01	1
65	0150-44	2
66	0100-49	1
67	0006-10	1
71	0100-09	2
81	0800-15	1
82	0006-50	2
85	0777-090	1
88	3101-00021B65	1
91	0777-071	1
94	0001-18	4
95	0777-089	1

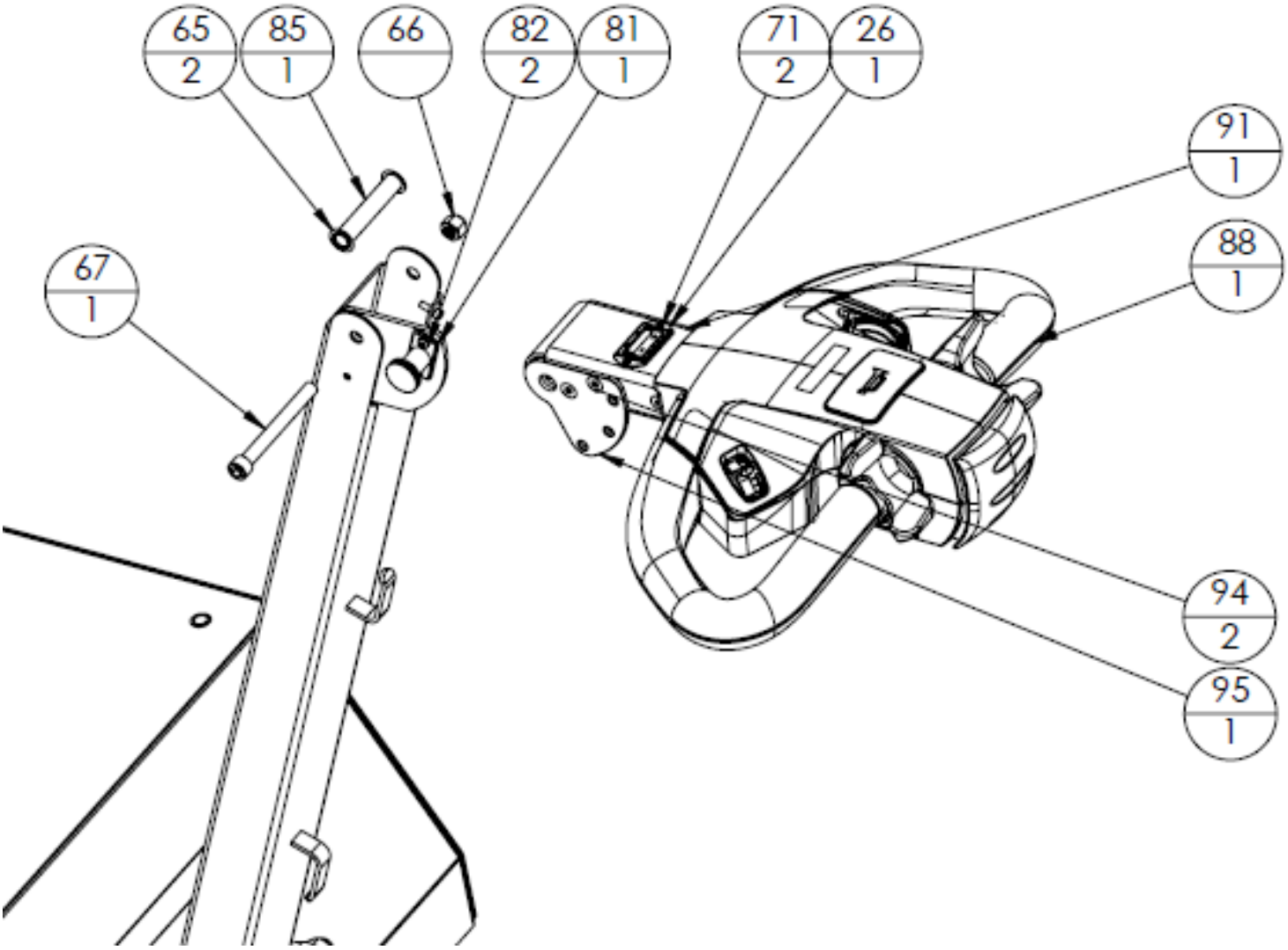

Item No.	Part No.	Quantity
28	0777-070	1
29	0718-05	1
30	0777-070	1
31	2012-s140	1
32	0923-20	1
33	0150-28	4
34	0006-64	4
35	0001-15	2
36	0006-53	2
37	Tie Down	1
39	Grommet	1

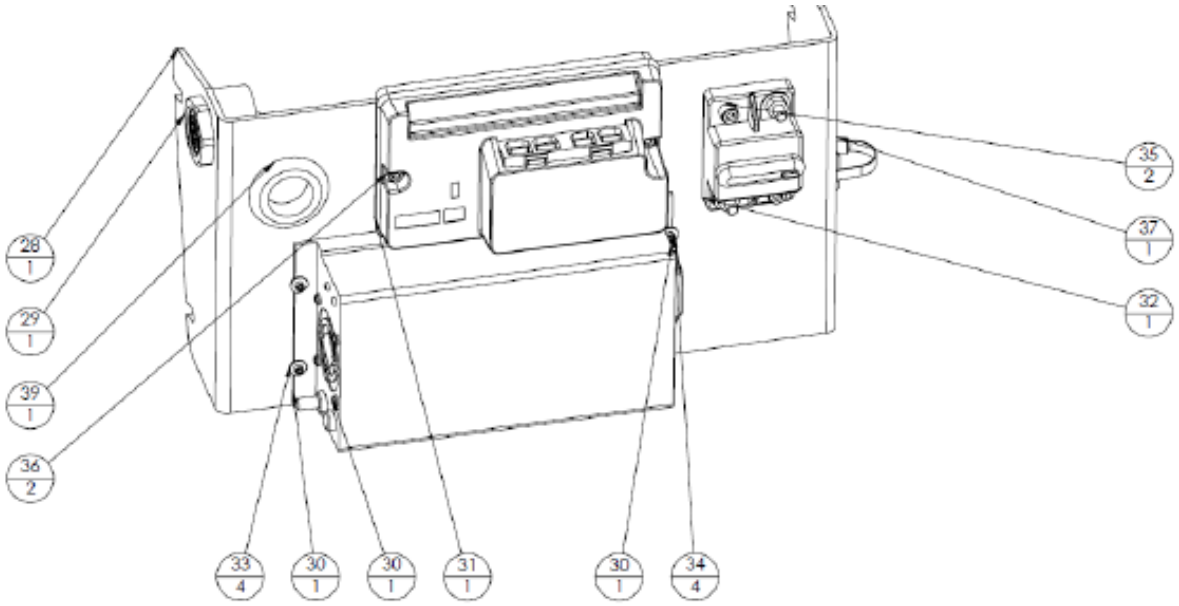

Item No.	Part No.	Quantity
13	0604-30	2
16	0440-06	2
17	0150-34	4
18	0100-55	2
19	0777-031XHD	1

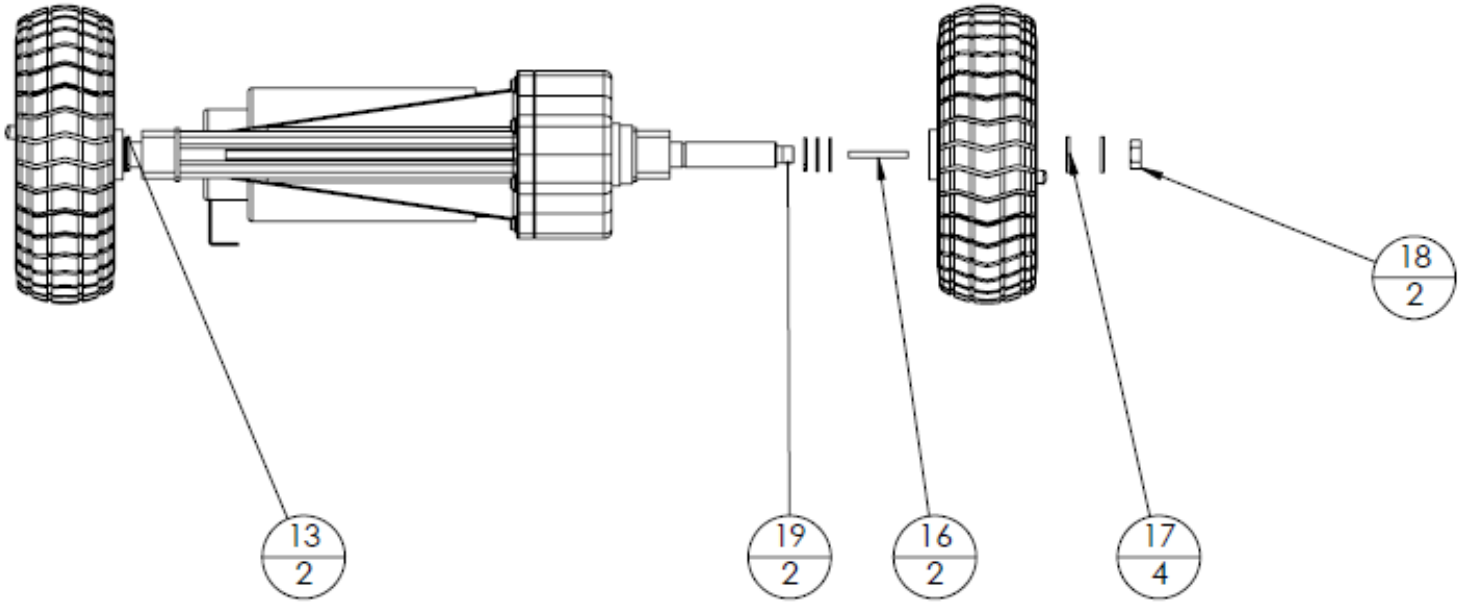

Item No.	Part No.	Quantity
45	1065-1010	1
46	1065-1011	1
47	1065-12	6,14
48	1065-13	1

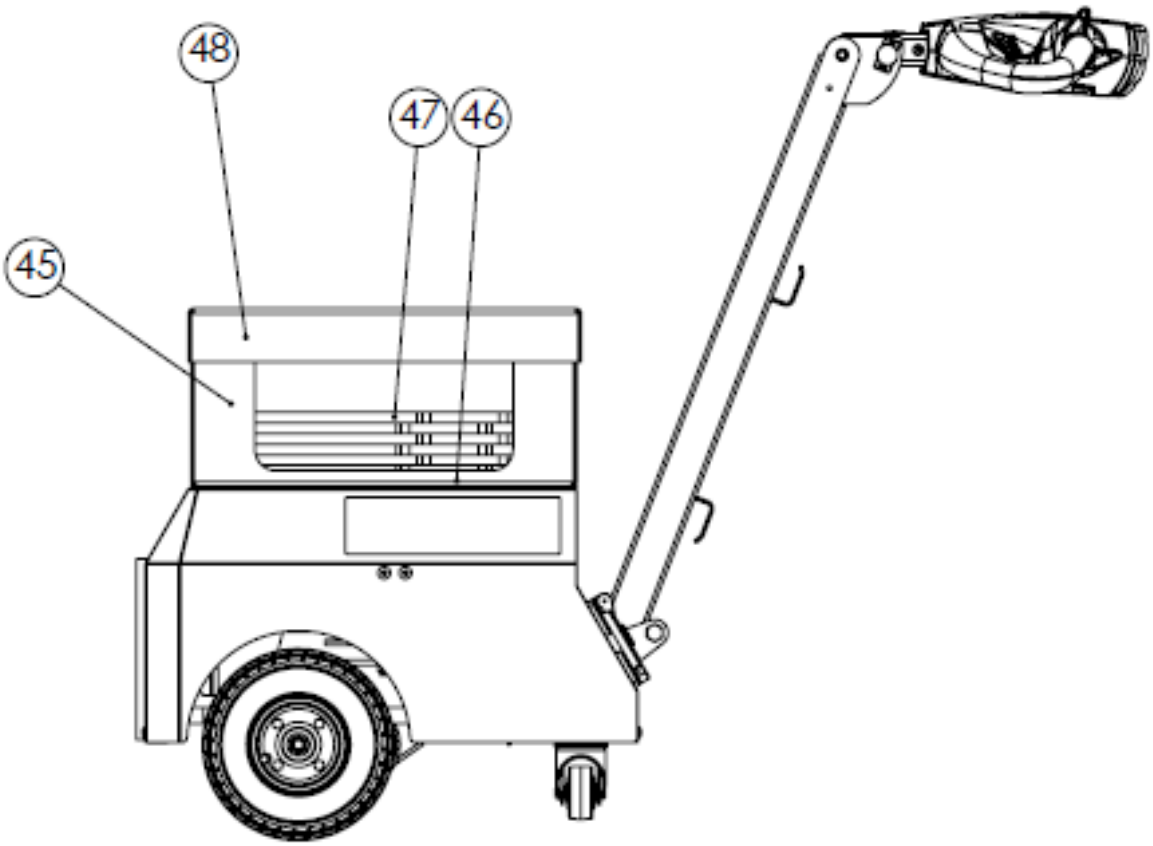

Item No.	Part No.	Quantity
142	333203	1
144	0150-10	8
145	0710-50	1
146	0002-26	2
149	0006-38	5
150	333342	1
162	333339	1

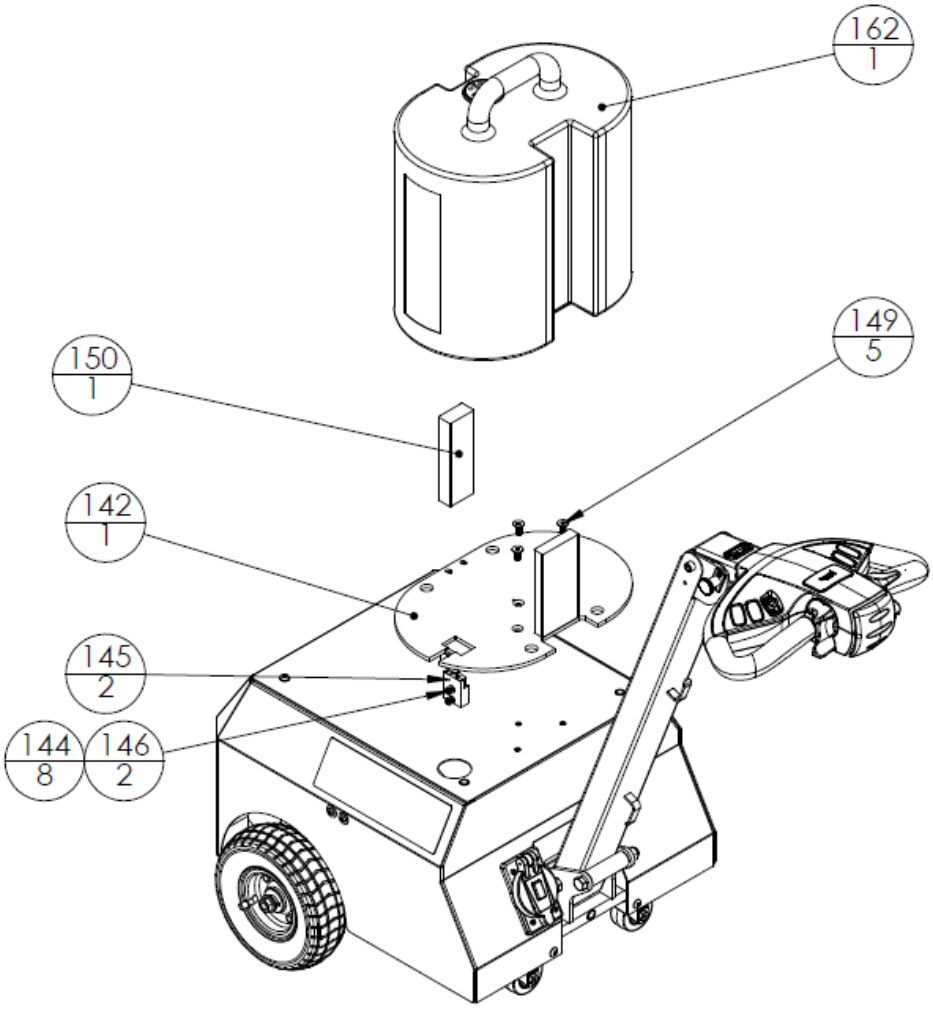

Electro *Kinetic* Technologies
Ergonomic Solutions for Transport

PRODUCT WARRANTY

This warranty is effective for products manufactured by Electro Kinetic Technologies, LLC (EKT) on or after January 31, 2016.

EKT warrants that its PONY EXPRESS, BREEZ and SHOPPER Products shall be free from defects in material and workmanship and conform to specifications and are covered by a two (2) year limited warranty, which provides that if any part of the frame weldment or drive system (motor/transaxle) proves defective in manufacturing, materials, or workmanship, such defect will be repaired or replaced at the company's option. Other parts are warranted against defects in manufacturing, materials, or workmanship, for a period of one (1) year from the date of purchase. Defective parts will be repaired or replaced at the company's option.

Exclusions or Exceptions:

- Excluded products covered by this warranty include Pony Express 1050, 1060 and custom products.
- Service calls, trip charges, transportation to or from the service center or distributor, or other charges imposed by the distributor or service center to make the repairs on the product are not covered by this warranty.
- All labor to service equipment under warranty done at the EKT factory is covered.
- Batteries carry a one (1) year warranty from the date of original factory shipment.
- Cylinders and hydraulic pump carry a (2) two-year warranty.
- Seats and armrests carry a one (1) year warranty covering defects in manufacturing only (cuts and tears are excluded).
- Freight costs associated with shipping a unit to EKT or returning unit back to customer after repair, whether repairs are covered under warranty, are not covered by this warranty.
- Motor brushes, fuses, charging cords and other normal wear items are not covered by this warranty.
- Failure of any part or system caused by abuse or vandalism voids this entire warranty.
- Defects, product, or part failure caused by unauthorized work performed on the product.
- Part failure resulting from failure to maintain or use the product as specified in the Owner's Manual.
- Any part, accessory, or modification – authorized or unauthorized – placed on the product, which is not manufactured, supplied, or installed by EKT.
- Shipping damage is not covered by this warranty.
- Any warranty or claim made by an independent sales agent contrary to, or in addition to, this warranty.
- Any claim for incidental or consequential damages is in lieu of any implied or other warranties. Electro Kinetic Technologies, LLC reserves the right to make changes to this warranty at any time without notice.
- Any changes to this warranty, whether written or verbal, will not be accepted without the written consent of the President of Electro Kinetic Technologies, LLC.

A dated sales receipt is required for warranty parts. This warranty is limited to, for and with the original purchaser only and is non-transferable.

W194 N11301 McCormick Drive • Germantown, WI 53022 USA • Tel: 262-250-7740 • Fax: 262-250-7741
www.ek-tech.com • sales@ek-tech.com